# SCONCE NEW YORK W02912CH

SKU: W02912CH · NEW YORK



| | |
|---|---|
| Type | **Wall lamps** |
| Width | **11 cm** |
| Length | **20 cm** |
| Height | **28.5 cm** |
| Net weight (product) | **2.5 kg** |
| Socket | **E14** |
| Number of light sources | **2** |
| Maximum power | **40W** |
| Light sources included | **No** |
| IP rating | **IP20** |
| Material | **Metal, Glass** |
| Colour / finish | **Silver** |
| EAN | **5902115962912** |

## DIMENSIONS

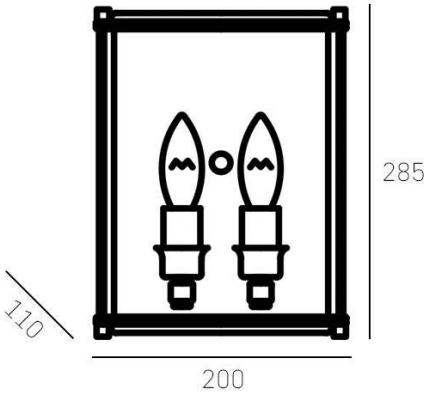


CONTACT

**COSMOLight / Evolution Home**

biuro@cosmolight.pl · +48 534 206 432 · +48 534 206 433

Mon-Fri 8:00-16:00