SCONCE NEW YORK W02503CH-BK

SKU: W02503CH-BK · NEW YORK



Type	**Wall lamps**
Width	**30 cm**
Length	**16 cm**
Height	**26 cm**
Net weight (product)	**1.4 kg**
Socket	**E14**
Number of light sources	**2**
Maximum power	**40W**
Light sources included	**No**
IP rating	**IP20**
Material	**Metal**
Colour / finish	**Silver**
Lampshade colour	**Black**
EAN	**5902115964527**

DIMENSIONS

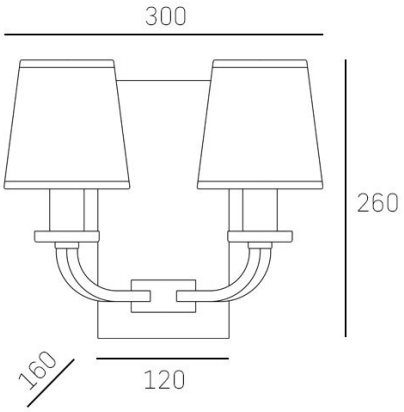

AVAILABLE VARIANTS

Polished Gold	W02510AU-BK
Silver	W02503CH-WH
Polished Gold	W02510AU-WH
Silver	**W02503CH-BK**

CONTACT

COSMOLight / Evolution Home

biuro@cosmolight.pl · +48 534 206 432 · +48 534 206 433

Mon-Fri 8:00-16:00