# SCONCE PRALINES W01237WH

SKU: W01237WH · PRALINES



| | |
|---|---|
| Type | **Wall lamps** |
| Diameter | **22 cm** |
| Height | **26 cm** |
| Net weight (product) | **2 kg** |
| Socket | **E27** |
| Number of light sources | **1** |
| Maximum power | **40W** |
| Light sources included | **No** |
| IP rating | **IP20** |
| Material | **Glass** |
| Colour / finish | **White, Brass** |
| EAN | **5902115964237** |

## DIMENSIONS

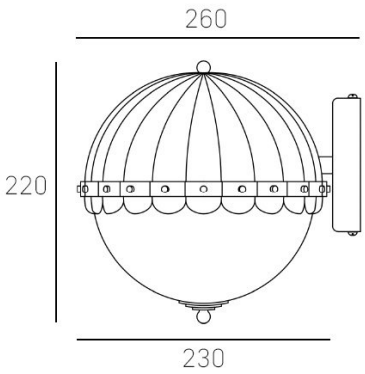


## AVAILABLE VARIANTS

| | |
|---|---|
| **White, Brass** | **W01237WH** |
| Brass, Black | W01244BK |
| Brass | W01251BR |

CONTACT

**COSMOLight / Evolution Home**

biuro@cosmolight.pl · +48 534 206 432 · +48 534 206 433

Mon-Fri 8:00-16:00