PENDANT LAMP WELLINGTON P12340BR

SKU: P12340BR · WELLINGTON



Type	**Pendant lamps, Island**
Diameter	**66.5 cm**
Height	**55 cm**
Height min-max (drop)	**64-106 cm**
Net weight (product)	**12 kg**
Socket	**E14**
Number of light sources	**12**
Maximum power	**25W**
Light sources included	**No**
IP rating	**IP20**
Material	**Metal, Glass**
Colour / finish	**Brass**
EAN	**5902115965340**

DIMENSIONS

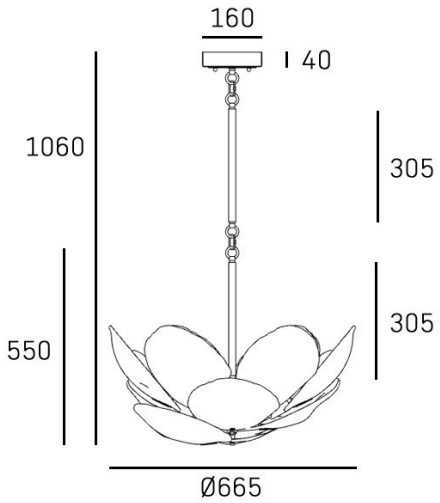

CONTACT

COSMOLight / Evolution Home

biuro@cosmolight.pl · +48 534 206 432 · +48 534 206 433

Mon-Fri 8:00-16:00