COSMOLight®

TECHNICAL DATA SHEET

PENDANT LAMP NEW YORK P04667AU-BK

SKU: P04667AU-BK · NEW YORK



DIMENSIONS

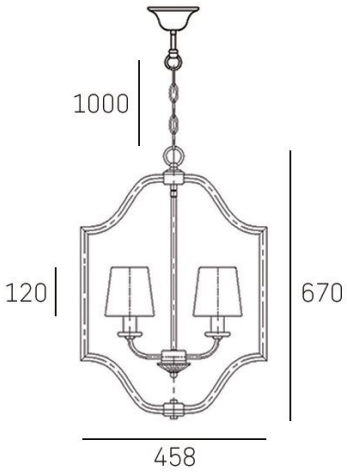

Type	**Pendant lamps, Chandeliers, Island**
Width	**46 cm**
Length	**46 cm**
Height	**67 cm**
Height min-max (drop)	**86-180 cm**
Net weight (product)	**4.1 kg**
Socket	**E14**
Number of light sources	**4**
Maximum power	**40W**
Light sources included	**No**
IP rating	**IP20**
Material	**Metal, Crystal**
Colour / finish	**Polished Gold**
Lampshade colour	**Black**
EAN	**5902115963667**

AVAILABLE VARIANTS

Silver	P04380CH-WH
Polished Gold	**P04667AU-BK**
Silver	P04380CH-BK

CONTACT

COSMOLight / Evolution Home

biuro@cosmolight.pl · +48 534 206 432 · +48 534 206 433

Mon-Fri 8:00-16:00